			VR EVO 8	VR EVO 8-S	VR EVO 10	VR EVO 10-S	VR EVO 12	VR EVO 12-S
Service Kits	KIT Contents	DESCRIPTION	KIT PART NUMBER					
	2,3,4,5	Motor Kit	104216	104216	104217	104217	104217	104217
	10,31	Remote/Control Module Kit	104218	104218	104218	104218	104218	104218
	20,21,22, 23,24,28	End Housing Kit	104223	104223	104223	104223	104223	104223
	17,18,19, 24,25,26, 27,28	Carrier Kit	104224	104224	104224	104224	104225	104225
	14,15,16, 28,29	Ring Gear Kit	104226	104226	104226	104226	104226	104226
	6,12	Brake Kit	104227	104227	104227	104227	104227	104227
	4,5	Bushing & Seal Kit	104228	104228	104228	104228	104228	104228
	2,4,5,13	Drum Support (Geartrain) Kit	104230	104230	104230	104230	104230	104230

Item Description	ITEM	DESCRIPTION	KIT PART NUMBER					
	1	Motor Cover	104215	104215	104215	104215	104215	104215
	32	Rope Assembly	86514	88468	32403	88468	32403	88468
	30	Drum Assembly	104229	104229	104229	104229	104229	104229
	8	Contactor	98381	98381	98381	98381	98381	98381
	33	Roller Fairlead (Not Shown)	104220	N/A	104220	N/A	104220	N/A
	33	Hawse Fairlead	N/A	104219	N/A	104219	N/A	104219
	20	Clutch Lever	104231	104231	104231	104231	104231	104231
	34	Hook	104221	104221	104221	104221	104221	104221

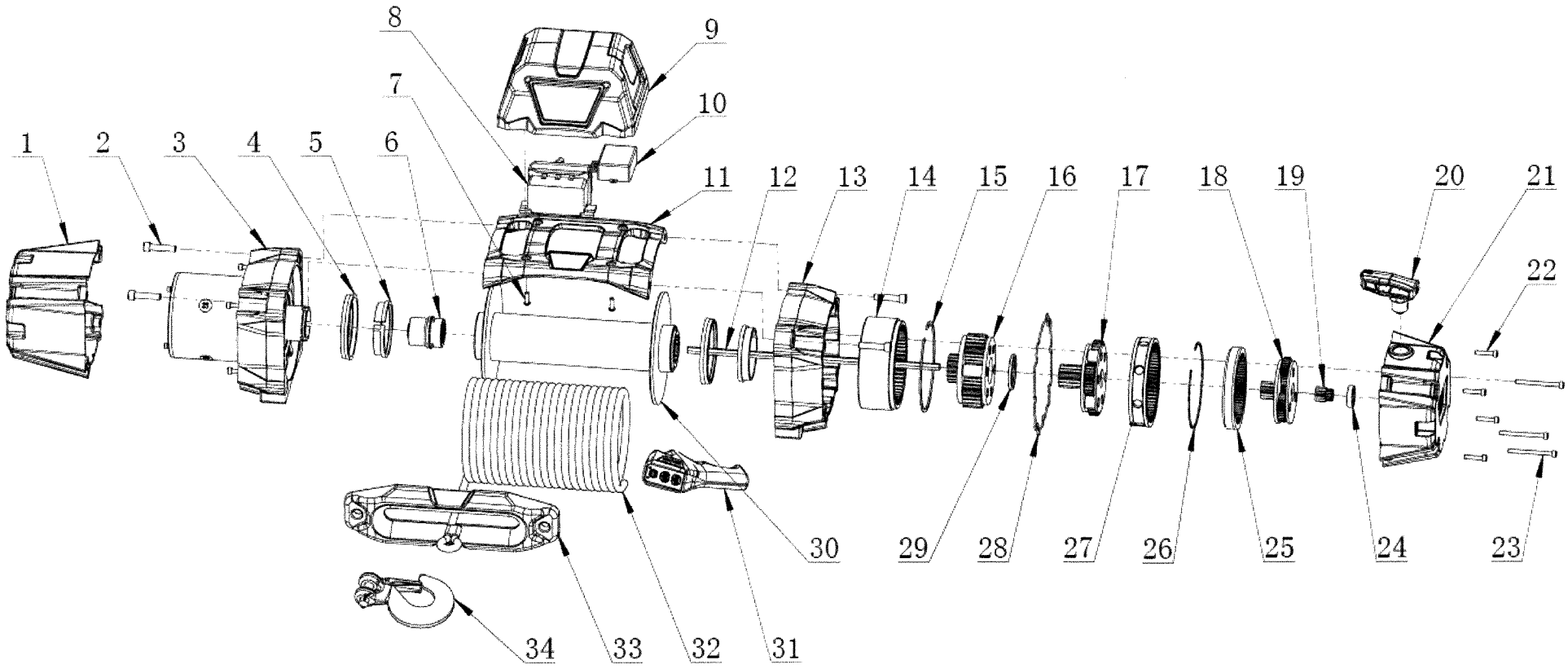
1
2
3
4
5
6
7
8
9
10
11
12
13
14
15
16
17
18
19
20
21
22
23
24
25
26
27
28
29
30
31
32
33
34